REV.	DESIGN	DATE

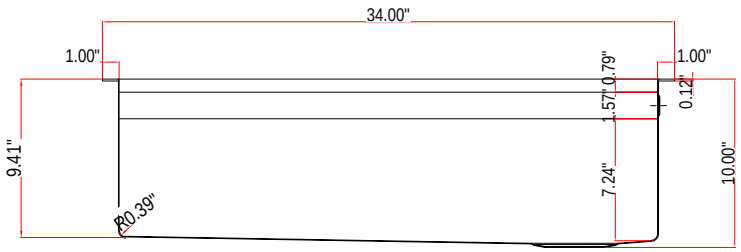

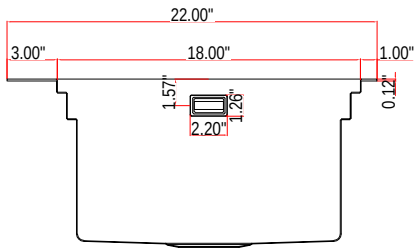

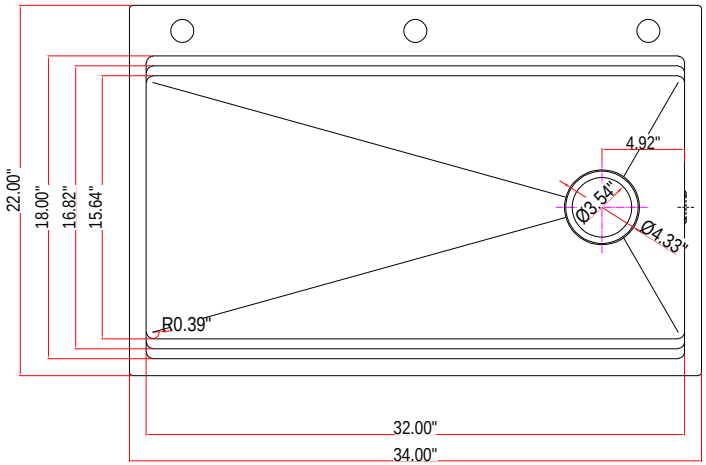

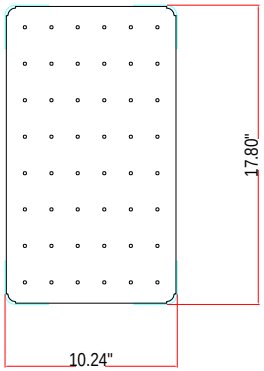

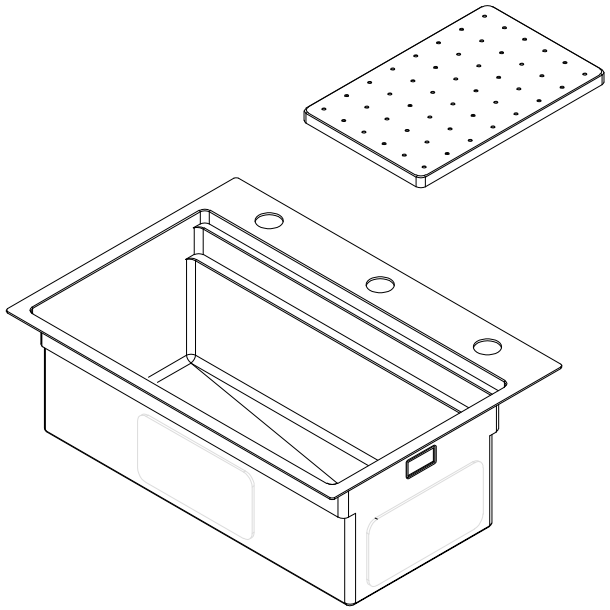

PRODUCT DRAWING

Material: SUS304/T=0.118"+0.039", single-side brushed sheet

TECHNICAL REQUIREMENTS

1. Parts are fabricated by manual welding;
2. Part surfaces must be free of scratches, dents, drag marks, wrinkles, bumps and other defects;
3. Exposed edges must be deburred;
4. Unspecified dimensional tolerances per GB1800-79, grade IT15;
5. Front face to be brushed with an even, fine grain; sound-deadening pads and underbody coating (evenly sprayed) applied to the bowl bottom or back of the bowl, per order requirements;

SIZE RANGE (in)	0.02-0.24	0.24-3.15	3.15-4.72	4.72-15.75	15.75-31.50	ANGLE
TOLERANCE	±0.014	±0.029	±0.034	±0.055	±0.079	±1°

DESIGN		STD.		3						
DRAWN		CHECKED		2						
PROD.		REVIEWED		1						
PROCESS		VERIFIED		MARK	QTY	CHANGE NO.	CHANGE	CHECKED	REVIEWED	APPROVED
CO-SIGN		APPROVED		MODEL		QTY		NET WT/PC (kg)	MATERIAL CODE	
			SCALE	MATL	SUS304/δ0.039"			CODE		
			PAGE	REV.	NAME					

All rights reserved. Without authorization, this drawing may not be reproduced or distributed, and products made from this drawing or any modified version of it may not be supplied to any third party in any form.

BINDING NO.

PAGE